HB Series Hydraulic Crane Buffers

Technical datasheet · Issued 2026-10-17

Four body sizes (HB 063, 080, 100, 125), each in 15 strokes from 100 to 800 mm: 60 standard models. Energy absorption 15–435 kJ per stroke, buffering force up to 670 kN. Every buffer is made to order in Ankara, Türkiye.

HOW TO SELECT

1. Calculate the kinetic energy at impact: $E = ½·m·v^2$ (m = moving mass, v = impact speed).
2. Divide it by the number of buffers that share the impact and choose a model whose W exceeds that value with a margin.
3. Check the buffering force F against the end stop and runway structure.

STANDARD MODELS

HB 063

Model	S	L	L1	L2	B	D1	D2	D3	d	W (kJ)	F (kN)
HB 063 100	100	455.5	202	233.5	20	91	168	135	17	15	170
HB 063 150	150	568	252	296	20	91	168	135	17	23	170
HB 063 200	200	680.5	302	358.5	20	91	168	135	17	30	170
HB 063 250	250	793	352	421	20	91	168	135	17	38	170
HB 063 300	300	905.5	402	483.5	20	91	168	135	17	46	170
HB 063 350	350	1018	452	546	20	91	168	135	17	51	160
HB 063 400	400	1130.5	502	608.5	20	91	168	135	17	54	150
HB 063 450	450	1243	552	671	20	91	168	135	17	57	140
HB 063 500	500	1355.5	602	733.5	20	91	168	135	17	59	130
HB 063 550	550	1468	652	796	20	91	168	135	17	60	120
HB 063 600	600	1580.5	702	858.5	20	91	168	135	17	60	110
HB 063 650	650	1693	752	921	20	91	168	135	17	59	100
HB 063 700	700	1805.5	802	983.5	20	91	168	135	17	57	90
HB 063 750	750	1918	852	1046	20	91	168	135	17	54	80
HB 063 800	800	2030.5	902	1108.5	20	91	168	135	17	51	70

HB 080

Model	S	L	L1	L2	B	D1	D2	D3	d	W (kJ)	F (kN)
HB 080 100	100	522.5	209.5	288	25	110	198	165	17	23	260
HB 080 150	150	635	259.5	350.5	25	110	198	165	17	35	260
HB 080 200	200	747.5	309.5	413	25	110	198	165	17	48	260
HB 080 250	250	860	359.5	475.5	25	110	198	165	17	59	260
HB 080 300	300	972.5	409.5	538	25	110	198	165	17	68	250
HB 080 350	350	1085	459.5	600.5	25	110	198	165	17	76	240
HB 080 400	400	1197.5	509.5	663	25	110	198	165	17	84	230
HB 080 450	450	1310	559.5	725.5	25	110	198	165	17	90	220
HB 080 500	500	1422.5	609.5	788	25	110	198	165	17	95	210
HB 080 550	550	1535	659.5	850.5	25	110	198	165	17	100	200
HB 080 600	600	1647.5	709.5	913	25	110	198	165	17	104	190
HB 080 650	650	1760	759.5	975.5	25	110	198	165	17	106	180
HB 080 700	700	1872.5	809.5	1038	25	110	198	165	17	108	170
HB 080 750	750	1985	859.5	1100.5	25	110	198	165	17	109	160
HB 080 800	800	2097.5	909.5	1163	25	110	198	165	17	109	150

HB 100

Model	S	L	L1	L2	B	D1	D2	D3	d	W (kJ)	F (kN)
HB 100 100	100	538.5	207	301.5	30	132	258	210	23	38	420
HB 100 150	150	651	257	364	30	132	258	210	23	58	420
HB 100 200	200	763.5	307	426.5	30	132	258	210	23	78	420
HB 100 250	250	876	357	489	30	132	258	210	23	98	420
HB 100 300	300	988.5	407	551.5	30	132	258	210	23	115	420
HB 100 350	350	1101	457	614	30	132	258	210	23	132	420
HB 100 400	400	1213.5	507	676.5	30	132	258	210	23	148	410
HB 100 450	450	1326	557	739	30	132	258	210	23	161	400
HB 100 500	500	1438.5	607	801.5	30	132	258	210	23	175	390
HB 100 550	550	1551	657	864	30	132	258	210	23	190	380
HB 100 600	600	1663.5	707	926.5	30	132	258	210	23	200	370
HB 100 650	650	1776	757	989	30	132	258	210	23	210	360
HB 100 700	700	1888.5	807	1051.5	30	132	258	210	23	220	350
HB 100 750	750	2001	857	1114	30	132	258	210	23	230	340
HB 100 800	800	2113.5	907	1176.5	30	132	258	210	23	240	330

HB 125

Model	S	L	L1	L2	B	D1	D2	D3	d	W (kJ)	F (kN)
HB 125 100	100	528.5	204.5	289	35	167	300	245	27	60	670
HB 125 150	150	641	254.5	351.5	35	167	300	245	27	91	670
HB 125 200	200	753.5	304.5	414	35	167	300	245	27	121	670
HB 125 250	250	866	354.5	476.5	35	167	300	245	27	154	670
HB 125 300	300	978.5	404.5	539	35	167	300	245	27	185	670
HB 125 350	350	1091	454.5	601.5	35	167	300	245	27	215	670
HB 125 400	400	1203.5	504.5	664	35	167	300	245	27	248	670
HB 125 450	450	1316	554.5	726.5	35	167	300	245	27	275	650
HB 125 500	500	1428.5	604.5	789	35	167	300	245	27	301	650
HB 125 550	550	1541	654.5	851.5	35	167	300	245	27	325	630
HB 125 600	600	1653.5	704.5	914	35	167	300	245	27	351	630
HB 125 650	650	1766	754.5	976.5	35	167	300	245	27	377	630
HB 125 700	700	1878.5	804.5	1039	35	167	300	245	27	393	610
HB 125 750	750	1991	854.5	1101.5	35	167	300	245	27	414	610
HB 125 800	800	2103.5	904.5	1164	35	167	300	245	27	435	590

COLUMNS

- S – stroke (mm)
- L – overall length (mm)
- D2 / D3 – flange and bolt-circle diameters (mm); d – bolt-hole diameter (mm)
- L1, L2, B, D1 – see the mounting diagrams
- W – energy absorption per stroke (kJ)
- F – buffering force (kN)

CONFIGURATION OPTIONS

- Mounting: front mount (FM) or rear mount (RM)
- Service: indoor or outdoor; normal or aggressive environment (coastal, chemical, dust)
- Colors: red, blue, yellow, green, black, white
- Custom strokes, flange drilling and like-for-like replacements on request

MOUNTING DIAGRAMS

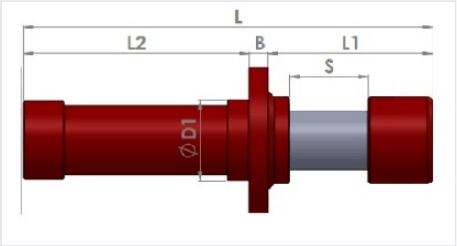

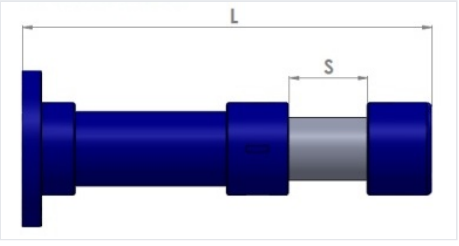

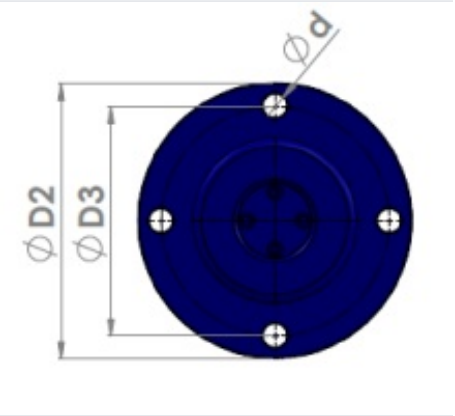

REQUEST A QUOTE

Send us the crane mass, impact speed, number of buffers and operating environment, and we will size the model with you.
KRANHAUSS · +90 533 268 05 64 · info@kranhauss.com · www.kranhauss.com/en/products/crane-buffers/hydraulic-buffer

Data as published on kranhauss.com. Final dimensions are confirmed in the order drawing.